Fault Detection in Sequential Circuits

Test pattern: 10

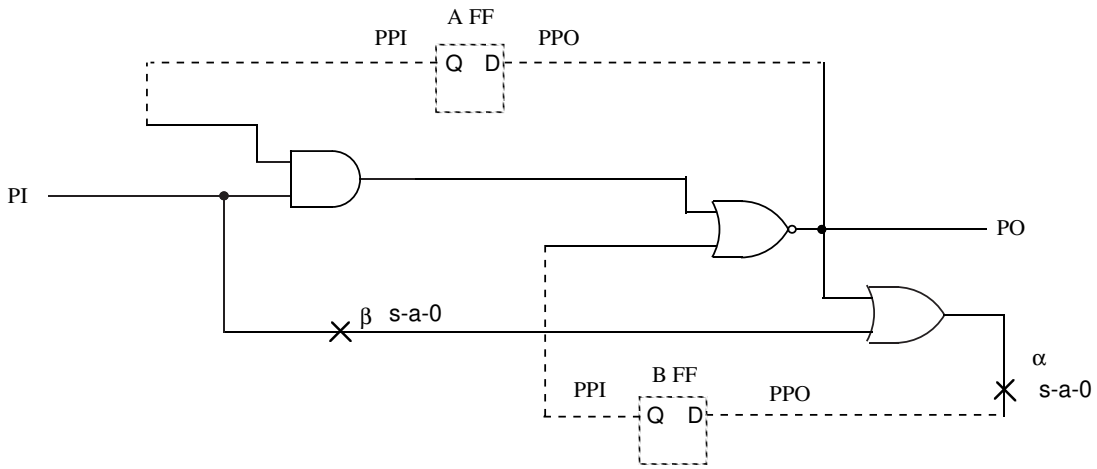

Example: Fault Equivalence

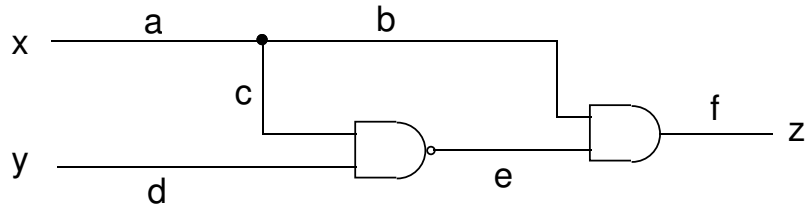

x	y	z	a/0	a/1	b/0	b/1	c/0	c/1	d/0	d/1	e/0	e/1	f/0	f/1
0	0	0	0	1	0	1	0	0	0	0	0	0	0	1
0	1	0	0	0	0	1	0	0	0	0	0	0	0	1
1	0	1	0	1	0	1	1	1	1	0	0	1	0	1
1	1	0	0	0	0	0	1	0	1	0	0	1	0	1