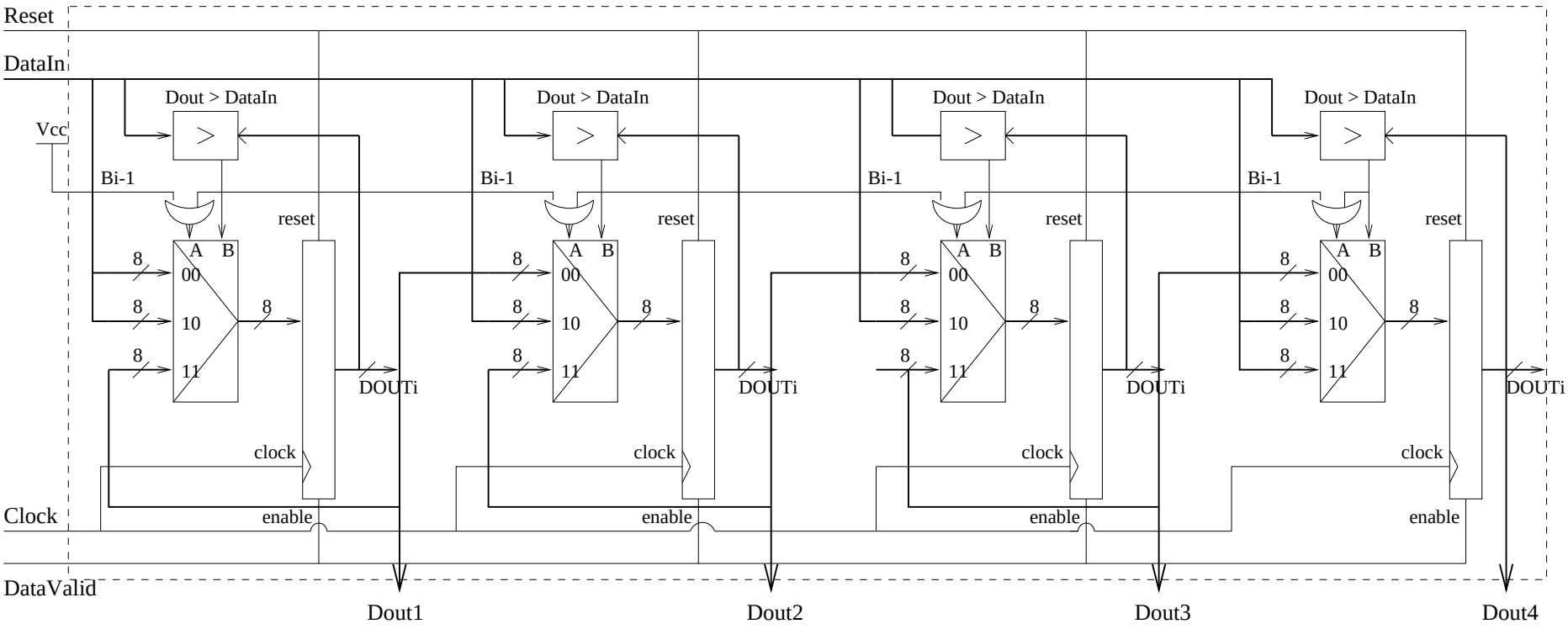

Figure 3: 4 entry 8-bit sorter schematic